Simply Better Connections

EA1240

Temperature & Humidity Sensor

For environmental monitoring and management, ATEN provides sensor probes that work in tandem with the Power Distribution Units, which enable you to get readings of temperate and humidity. Environmental conditions can be monitored with alarms according to customizable minimum/maximum thresholds set for temperature and humidity.

*The Sensor is an optional accessory. You can use the ATEN PDU without environmental sensors. However, if you want to have complete energy management of your data center with the full use of ATEN solutions, a sensor installation is required.

Features

- Measurement range: 0 – 40°C (Temperature); 30 – 80% RH (Humidity)
- Measurement accuracy: +/- 1°C (Temperature); +/- 3% RH (Humidity)
- Compact design – built in 3 m cable
- High sensitivity
- Easy operation

Specifications

Connectors	RJ-11 Male
Measurement	
Range	Temperature: 0 - 40°C Humidity: 30– 80% RH
Accuracy	Temperature: +/- 1°C Humidity: +/- 3 % RH
Supply Voltage	5 VDC (Max)
Current Consumption	5mA(Max); 2mA(Avg.)
Environmental	
Operating Temperature	0 - 55°C
Storage Temperature	-20 - 70°C
Humidity	< 95% RH
Physical Properties	
Housing	Plastic
Weight	0.06 kg
Cable Length	3 m

Diagram

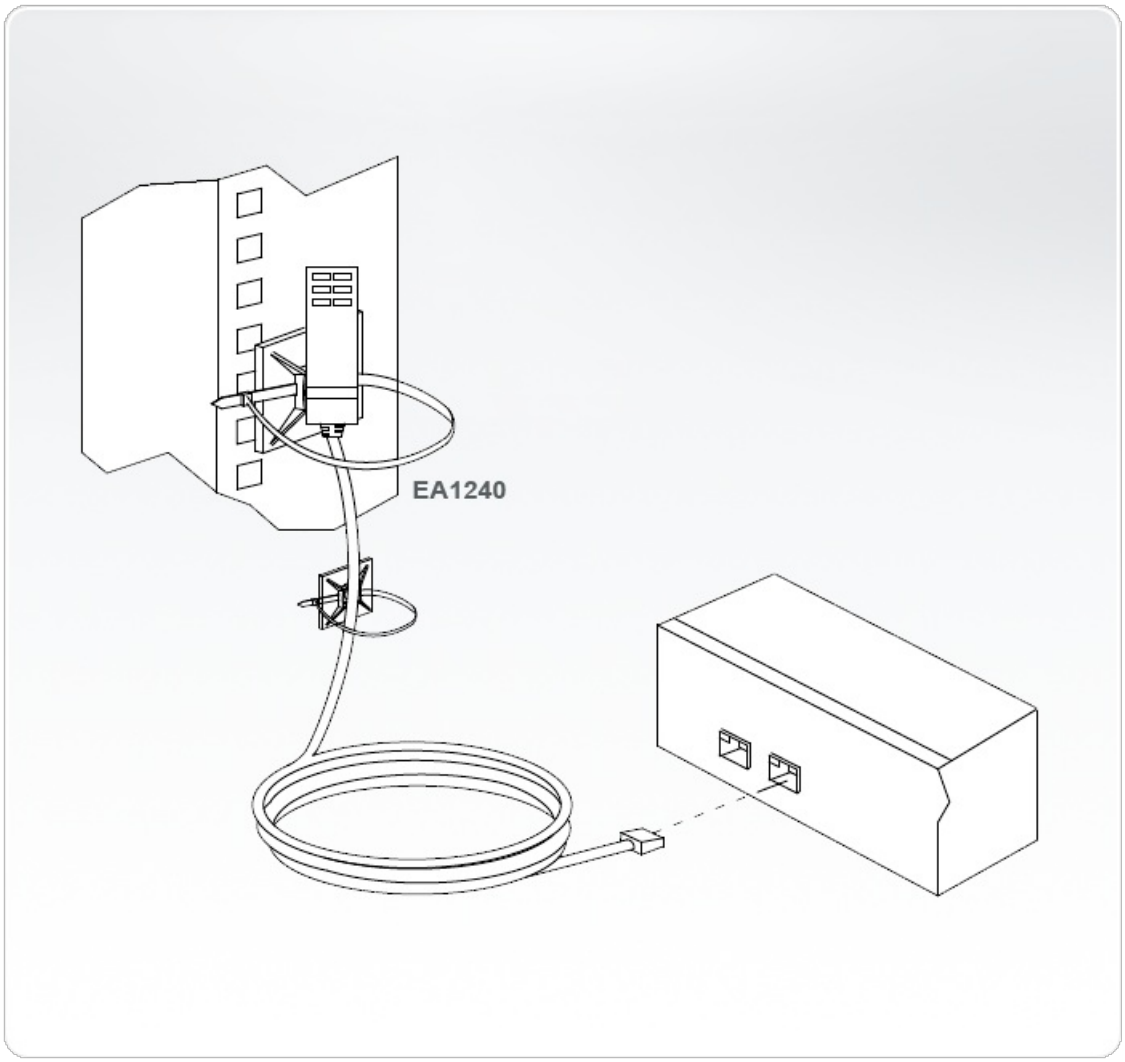

ATEN International Co., Ltd.
3F., No.125, Sec. 2, Datong Rd., Sijhih District., New Taipei City 221, Taiwan
Phone: 886-2-8692-6789 Fax: 886-2-8692-6767
www.aten.com E-mail: marketing@aten.com

© Copyright 2015 ATEN® International Co., Ltd.
ATEN and the ATEN logo are trademarks of ATEN International Co., Ltd.
All rights reserved. All other trademarks are the property of their respective owners.