Simply Better Connections

SN1116CO

16-Port Serial Console Server with Dual Power / SFP

ATEN SN11xxCO Series (SN1116CO / SN1132CO / SN1148CO) serial console server provides IT and network administrators secure, out-of-band access to serial devices located at data centers or remote sites (such as network switches allowing console operation using RS-232 and USB console[1]). With dual power/SFP[2] in the SN11xxCO models, all of them integrate cutting edge technologies to provide convenient installation, secure serial device access, easy management and comprehensive control for data centers. SN11xxCO series also supports USB 4G dongle[3], for additional out-of-band network access.

All series of serial console server features Cisco pin-outs and auto-sensing DTE / DCE function, providing a direct connection to Cisco network switches (and other compatible devices) without rollover cables for more time-saving IT infrastructure deployment. In addition, it support online detection of connected serial devices (including terminal blocks) for device status monitoring. An e-mail notification will be sent to the administrator when connected devices are offline. With dual Ethernet ports and power supplies (AC), the SN11xxCO supports power redundancy as well as failover, or dual IP addresses access, ensuring 24 / 7 availability of access to serial devices. A DC power option is also available for each of the SN11xxCO/SN01xxCO model for more flexible implementation[4].

The SN11xxCO Series supports environmental monitoring through its sensor ports, remaining vigilant around the clock to detect any abnormal conditions. It offers audited and controlled door access using a cabinet lock through its relay port, enhancing security measures. All of the serial console servers can be utilized through ATEN's CC2000 software to provide centralized serial device access and integrated power management.

Available in 16-, 32- and 48-port models, the SN11xxCO serial console servers offer both in-band and out-of-band (OOB) remote serial console and USB console access to servers and network devices via a direct Telnet / SSH client, Java viewer and WebClient. The OOB management enables IT administrators to manage network devices (e.g. router, switch, UPS) in server rooms using management networks that are separated from the main / production networks. Where access difficulty occurs in the production network, the administrators can still access them via the console server. The serial console servers offer out-of-band access methods such as direct console connection from a local computer, USB console connection from a laptop, or hybrid network connection via the dual SFP (one connected to the production network and the other connected to the management network).

Implemented with various security technologies such as TLS 1.2 data encryption, RSA 2048-bit certificates,configurable user permissions for port access and control, local / remote / third-party authentication and authorization, IP / MAC address filter, and FIPS 140-2 certified cryptography, the SN11xxCO serial console servers assure administrators the security for easy and high-level access. For instance, access rights and privileges can be applied to 16 / 32 / 48 serial ports individually. Data encryption is provided to ensure that information and control are always protected. Logging and alerting of system events help to quickly resolve issues and mitigate risks.While secured by the above examples, the consolidated password authentication simplifies management.

The serial console servers are used to connect serial devices to an Ethernet network to allow access and control of demanding applications that manage industrial control, data acquisition, environment monitoring, remote facility operations and equipment management. Multiple operational modes are available to administrators including Console Management, Console Management Direct, Real COM Port, TCP Server / Client, UDP Server / Client, and Virtual Modem.

With their comprehensive features, the SN11xxCO Series help to maximize IT productivity, increase scalability, as well as reduce installation and operational costs with easy and secure remote management of serial devices. The serial console servers save you time and money by allowing administrators to manage their data centers from practically anywhere – minimizing travel and MTTR (Mean Time to Repair) costs, and ensuring the highest availability for data center services.

Note:
1. Compatible models: Cisco Catalyst 2960-C series
2. Fiber (2A-136G, 2A-137G) or copper (2A-143G) modules are sold separately. Please order with SN devices together.
3. This device only supports the ZTE MF79U USB 4G dongle.
4. DC power models include SN1116COD, SN1132COD, SN1148COD, SN0108COD, SN1116COD, SN0132COD, and SN0148COD.

Features

- System Accessibility and Availability
  - Secure in-band, out-of-band remote serial console and USB console access
  - Browser access with an intuitive GUI
  - Terminal-based access with a menu-driven UI or command-line interface
  - Modem dial-in / dial-back / dial-out access
  - Front USB ports for storage, USB console [1], and UC232B/UC232BF connection
  - Laptop USB Console (LUC) port for local console access via laptop
  - Dual Ethernet ports allow fail control or dual IP address access
  - Dual power supply
  - USB 4G dongle support – enables cellular out-of-band redundancy [2]

- Serial Console Management
  - Support sensor ports for environmental monitoring [3]
  - Relay port supports cabinet door access control
  - Auto-sensing DTE / DCE feature supports a direct connection to Cisco network switches (and other compatible devices) without rollover cables for more convenient IT infrastructure deployment
  - Online / Offline detection of connected serial devices (including terminal blocks) – automatically send event notifications when the devices are offline (e.g. power failure) for device status monitoring
  - Response Check – checks the system status of the connected serial devices, and sents a notification if the check fails (e.g.system crash)
  - Convenient and simple serial device access via selectable Telnet / SSH and third-party clients such as PuTTY
  - Easy port access via selectable ActiveX, Java serial viewer or WebClient
  - Comprehensive viewer functions – copy / paste, logging, data import, macros, broadcasting and message board
  - Sun Solaris ready – Sun "break-safe"
  - Alert Strings – whenever one of the pre-defined strings matches the message sent from the serial devices, you will be informed by serial console server via SNMP Trap alert and / or an email
  - Command filter – administrators can restrict users to execute only pre-defined commands
  - Multiple users can simultaneously access the same port – up to 16 connections per port
  - Modes for simultaneous access – Exclusive / Occupy / Share mode

- Security
  - Supports secure login from browsers with TLS 1.2 data encryption and RSA 2048-bit certificates
  - Configurable user permissions for port access and control
  - Local and remote authentication and login
  - Third-party authentication via RADIUS, TACACS+, LDAP / AD and Kerberos
  - IP and MAC address filter for enhanced security protection
  - High security grade – supports FIPS 140-2 level 1 security standards that use an embedded FIPS 140-2 certified OpenSSL cryptographic module (Certificate #1747, #2398, #2473)
  - Supports security level configuration – High, Medium-high, Medium or Custom, to ensure a fine granularity of network access control
  - IEEE 802.1X compliant
  - Supports SSH password-less login for enhanced security and simplified access management

- System Management
  - System configuration via web browser, Telnet / SSH client and local console
  - System log and event login
  - Event Destination – Event logs will be saved to Log server, Syslog server, and USB drive
  - SNMP agent v1/v2c/v3
  - Event notification – supports notification of SMTP email and SNMP Trap (v1/v2c/v3)
  - Backup / Restore system configuration and upgradeable firmware
  - Multi-browser support – Internet Explorer, Chrome, Firefox
  - NTP for time server synchronization
  - IPv4 / IPv6 support
  - LLDP support
  - CLI (command-line interface) support
  - Integrates into CC2000 software for centralized data center management
  - Integrates into CCVSR software for user session recording

- Serial Device Management
  - Serial operation modes – Console Management, Console Management Direct, Real COM Port, TCP Server / Client, UDP Server / Client, and Virtual Modem
  - Real COM driver for Windows 2000 or higher and Windows Server 2003 / 2008
  - Real TTY driver for Linux
  - Fixed TTY driver for UNIX [4]
  - Supports baud rates of 300, 600, 1200, 1800, 2400, 4800, 9600, 19200, 28800, 38400, 57600, 115200, 230400 bps

- Language
  - Multi-language web-based GUI – available in English, German, Japanese, Korean, Russian, Simplified Chinese and Traditional Chinese

Note:
1. Compatible models: Cisco Catalyst 2960-C series
2. Supports the ZTE MF79U only.
3. This is achieved using ATEN sensors
4. Fixed TTY Driver supports: OpenServer (Sco Unix), UnixWare 7, SVR 5, UnixWare 2.1, SVR 4.2, QNX 4.25, QNX 6, FreeBSD, Solaris 10, AIX 5.x, HP-UX 11i

Specifications

Connectors	
Serial	16 x RJ-45 Female
LAN Ports	2 x SFP Slot
Power	2 x IEC 60320/C14
Local Console	1 x RJ-45 Female
PON	1 x RJ-45 Female (Reserved)
Laptop USB Console (LUC) Port	1 x Mini USB
USB Port	4 x USB Type A Female
Environment Sensor Ports	2 x RJ11 Female 1 x 4-Pin Terminal Block
Relay	1 x 2-Pin Terminal Block • Normally open, isolated Relays; • Contact Rating: Max 24 VDC, 2A
Switches	
Power	2 x Rocker Switch
Reset	1 x Recessed Pushbutton
Maximum Input Power Rating	100–240VAC; 50/60Hz; 1.0A
Power Consumption	AC110V:9.2W:96BTU/h AC220V:9.3W:96BTU/h Note: ● The measurement in Watts indicates the typical power consumption of the device with no external loading. ● The measurement in BTU/h indicates the power consumption of the device when it is fully loaded.
LEDs	
Serial	16 (Green)
10/100/1000 Mbps	2 (Red/Orange/Green)
Power	2 (Blue)
Mode of Operation	Console Management,Console Management Direct,Real Com Port, TCP Server/Client, UDP Server/Client
Environmental	
Operating Temperature	0 - 55˚C
Storage Temperature	-20 ~ 60˚C
Humidity	0 - 80% RH, Non-condensing
Physical Properties	
Housing	Metal
Weight	4.51 kg (9.93 lb)
Dimensions (L x W x H)	43.84 x 32.84 x 4.40 cm (17.26 x 12.93 x 1.73 in.)
Note	- SN1116COD with dual DC power available at customer's request - Optional fiber (2A-136G, 2A-137G) or copper (2A-143G) modules available - Optional sensors (EA1140, EA1240, EA1340, EA1440, EA1441, EA1442, EA1540) available
Note	For some of rack mount products, please note that the standard physical dimensions of WxDxH are expressed using a LxWxH format.

Diagram

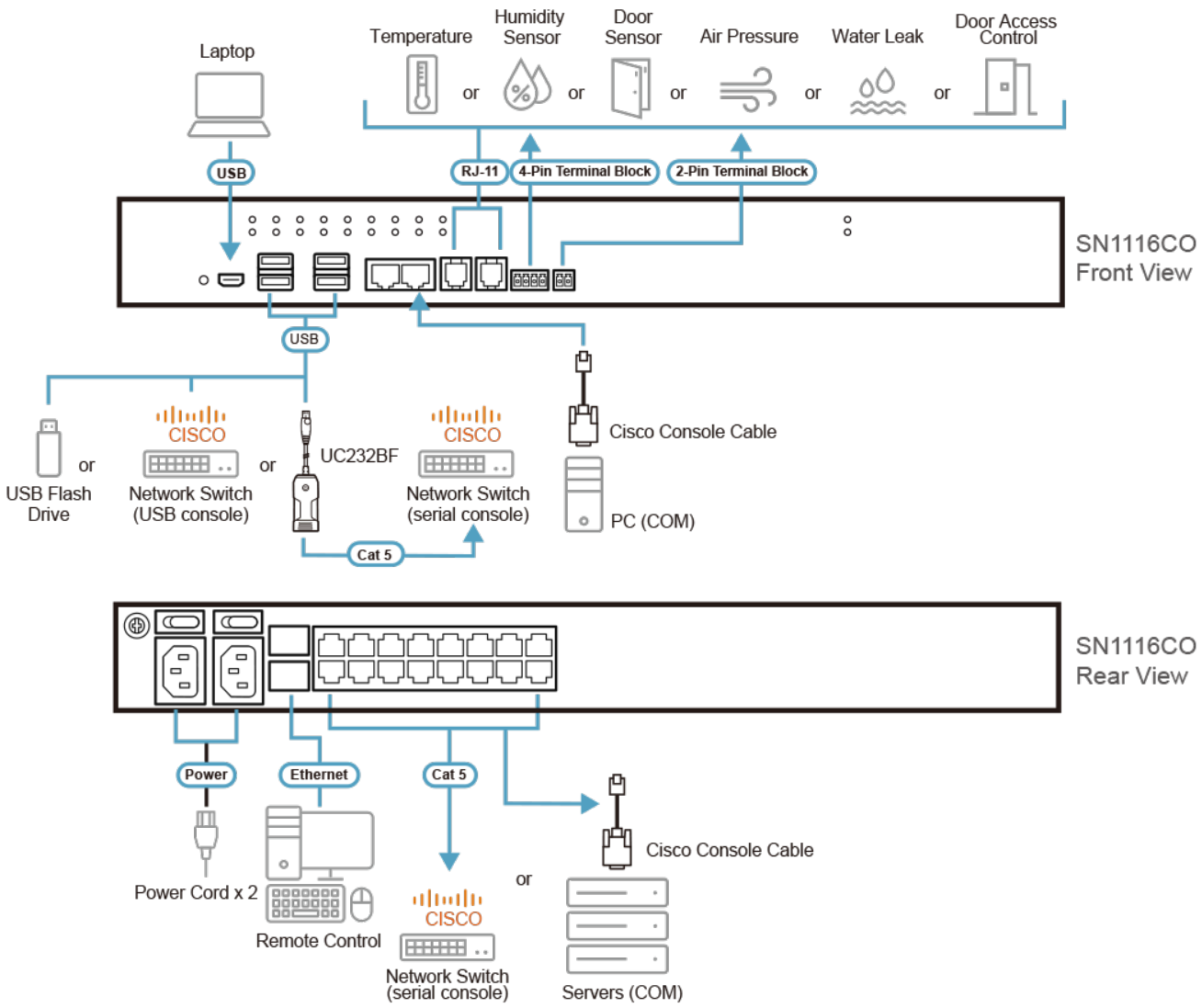

ATEN International Co., Ltd.
3F., No.125, Sec. 2, Datong Rd., Sijhih District., New Taipei City 221, Taiwan
Phone: 886-2-8692-6789 Fax: 886-2-8692-6767
www.aten.com E-mail: marketing@aten.com

© Copyright 2015 ATEN® International Co., Ltd.
ATEN and the ATEN logo are trademarks of ATEN International Co., Ltd.
All rights reserved. All other trademarks are the property of their respective owners.