KE8952

4K HDMI Single Display KVM over IP Extender with PoE

ATEN is well known for delivering innovative technologies that drive connectivity and access management solutions. As such, we introduce the new ATEN KE8952 4K HDMI KVM over IP Extender that brings together a unique blend of features and new technologies that offer the ultimate solution for extending computers to consoles on or off your IT infrastructure.

Utilizing expertise in over IP KVM solutions, KE8952 are IP-based HDMI KVM extenders that allow access to a computer system from a remote USB console to anywhere over an intranet. The KE8952 KVM over IP Extenders support one HDMI monitor at each end, providing a greatly improved video display image with 4K x 2K video resolution (up to 3840 x 2160). KE8952 also support 1Gbps SFP fiber module expansions, enabling connections via fiber optic network to extend distances in transmission. Furthermore, the KE8952 features Power over Ethernet (PoE) function, the power can be supplied through a PoE Network Switch; therefore, eliminating the need for a power adapter and effectively reducing the power configuration cost.

The 4K HDMI KVM over IP Extender consists of a Transmitter unit that connects to the computer and a Receiver unit that provides console access from a separate location. The computer is accessed from the remote console over a standard TCP/IP network via Cat 5e/6 cable that allows point-to-point, point-to-multipoint, multipoint-topoint, and multipoint-to-multipoint administration. KE8952 can be connected either directly to each other or via a high-speed network, over a copper-based or fiber-based LAN.

Implementing the KVM over IP Matrix Manager (CCKM) with KE8952, IT administrators receive advanced features functioning as auto detection of all KE Series Extenders* on the same subnet for the sake of fast installation or configuration, username/password authentication and authorization, and the ability to define different types of connections that can be switched and shared. Security features also provide extra protection, supporting AES encryption for secured data transmissions, while RADIUS, LDAP, AD or remote user authentication provides an added layer of connection security; moreover, with an OSD, RS-232 support, and Auto MDIX, the KE series is the most cost-effective and convenient way to get a full digital extension from anywhere on the intranet.

More flexible and efficient operations can be achieved in the KVM over IP Matrix System, which integrates KE Series Extenders with the KVM over IP Matrix Manager (CCKM), such as multi-display setups, video grouping, video profile scheduling and enhancements that give greater access to quick and easy control tools to configure KE devices over a network. Whether you're configuring, monitoring, administrating, controlling or extending computer access, the KVM over IP Matrix System is made adaptable, to fit an endless variety of working environments and workstation settings, as well as to provide solutions in broadcasting, control center, multimedia, manufacturing and many other industries where matrix extending is required.

Note:
Refer to www.aten.com for more about the KE Series extenders. For the latest list of compatible network switches, please visit: ATEN Support Center for more information.

Accessories:
*The power adapter and power cord for this product are sold separately. For more information about this accessory, see Accessories.

HDMI™
HIGH-DEFINITION MULTIMEDIA INTERFACE

Features

- Hardware
  - Support 32:9 ultra-wide resolution
  - Ultra High Definition (UHD) video quality – up to 3840 x 2160 @ 60Hz (4:2:0), 3840 x 2160 @ 30 Hz (4:4:4); 24-bit color depth
  - Support interlaced video (1080i)
  - Support stereo speakers and stereo microphone
  - High speed USB Storage Transmission support
  - Compliant with HDMI 1.4a and HDCP 1.4
  - Auto-MDIX – automatically detects cable type
  - Built-in 8KV/15KV ESD protection and 1KV surge protection
  - Fanless design for silent operations that are energy efficient
  - Hot pluggable
  - Upgradeable firmware
  - Rack Mountable – Mounting options:
    - 2X-021G Dual Rack Mount Kit
    - 2X-031G Single Rack Mount Kit
  - Support connection via Gigabit Ethernet port
  - Support SFP module
  - Support Power over Ethernet (PoE) function – compliant with the IEEE 802.3at standards

- Management
  - Remotely access computers on your KVM installation via intranet
  - Dual console operation – controls your system from both the transmitter's and receiver's keyboard, monitor, and mouse consoles
  - OSD (On Screen Display) on the Receiver configures both units
  - Support GUI operation
  - EDID Expert™ – selects optimum EDID settings to prevent video compatibility issue caused by different monitors
  - On-screen Preview – allows users to view the video of up to 36 displays on one screen
  - Command Line Interface – administrators can control all KE devices via RS-232 or TCP/IP using a CLI or 3rd party application
  - RS-232 serial ports – allow you to connect to a serial terminal for configuration, and serial devices such as touchscreens and barcode scanners
  - Flashing LED and beeping features help locate and identify devices

- Security
  - Dedicated LAN port for KE direct connections – can be isolated from the corporate network
  - Secure data transmission — 128-bit AES encryption to secure all data before it's transmitted over a network and decrypts the data on the receiver
  - Remote login security

- Virtual Media
  - USB Storage Transmission mode enhances data transmission performance, ideally for file transfers, OS patching, software installations and diagnostic testing
  - Support USB 2.0 DVD/CD drives, USB mass storage devices, PC hard drives and ISO images
  - Support Smart Card/CAC Reader

- Advanced Features**
  - ATEN Matrix Link – allows you instant link transmitters and receivers, and perform real-time port and profile switching on an iPad
  - Fast Switching – switch between different remote video resolutions on a local display within 0.3 seconds
  - Unlimited Video Walls – create multiple video walls with up to 12 x 12 (64 displays max.) in each layout
  - Advanced Scheduling – improves efficiency and saves costs by allowing media playback to be set based on time and date
  - Channel connections allow RX devices to connect to multiple TX devices – to stream video, audio, USB and serial sources independently
  - Support both internal and external authentication – external authentication supports LDAP, Active Directory, RADIUS and TACACS+
  - Advanced User Authorization Settings – administrators can set four access modes of permissions on TX devices for collaboration or to avoid interference among users
  - Configurable user and group permissions for access and control of KE devices
  - Support industry standard Transport Layer Security (TLS) protocol
  - Video grouping of up to 4 sets of KE series devices to support Multi-Display applications

  ** These advanced functions are supported when the KE devices are managed by KVM over IP Matrix Manager (CCKM)

Specification

Function	KE8952R	KE8952T
Connectors		
USB Port	2 x USB Type A Female (White)	N/A
Console Ports	2 x USB Type A Female (White) 1 x HDMI Female (Black) 1 x Mini Stereo Jack (Green) 1 x Mini Stereo Jack (Pink) 1 x DB-9 Male (Black)	2 x USB Type A Female (White) 1 x HDMI Female (Black) 1 x Mini Stereo Jack (Green) 1 x Mini Stereo Jack (Pink) 1 x DB-9 Male (Black)
KVM Ports	N/A	1 x USB Type B Female (White) 1 x HDMI Female (Black) 1 x Mini Stereo Jack (Green) 1 x Mini Stereo Jack (Pink) 1 x DB-9 Female (Black)
Power	1 x DC Jack (Black)	1 x DC Jack (Black)
LAN Ports	1 x RJ-45 (Black, PoE) 1 x SFP Slot	1 x RJ-45 (Black, PoE) 1 x SFP Slot
Switches		
OSD	1 x Pushbutton	N/A
Video	1 x Pushbutton	N/A
Graphics	1 x Pushbutton	N/A
Reset	1 x Semi-recessed Pushbutton	1 x Semi-recessed Pushbutton
LEDs		
10/100/1000 Mbps	1 (10: Orange / 100: Orange & Green / 1000: Green)	1 (10: Orange / 100: Orange & Green / 1000: Green)
Power	1 (Blue)	1 (Blue)
Local	1 (Green)	1 (Green)
Remote	1 (Green)	1 (Green)
Emulation		
Keyboard / Mouse	USB	USB
Power Consumption	POE:7.06W:59BTU	POE:9.02W:47BTU
Video Resolution	3840 x 2160 @ 60Hz (4:2:0), 3840 x 2160 @ 30 Hz (4:4:4)	3840 x 2160 @ 60Hz (4:2:0), 3840 x 2160 @ 30 Hz (4:4:4)
Environmental		
Operating Temperature	0–50°C	0–50°C
Storage Temperature	-20–60°C	-20–60°C
Humidity	0–95% RH, Non-condensing	0–95% RH, Non-condensing
Physical Properties		
Housing	Metal	Metal
Weight	1.26 kg (2.78 lb)	1.13 kg (2.49 lb)
Dimensions (L x W x H)	22.75 x 17.16 x 5.48 cm (8.96 x 6.76 x 2.16 in.)	21.50 x 16.29 x 4.18 cm (8.46 x 6.41 x 1.65 in.)
Note	For some of rack mount products, please note that the standard physical dimensions of WxDxH are expressed using a LxWxH format.	

Diagram

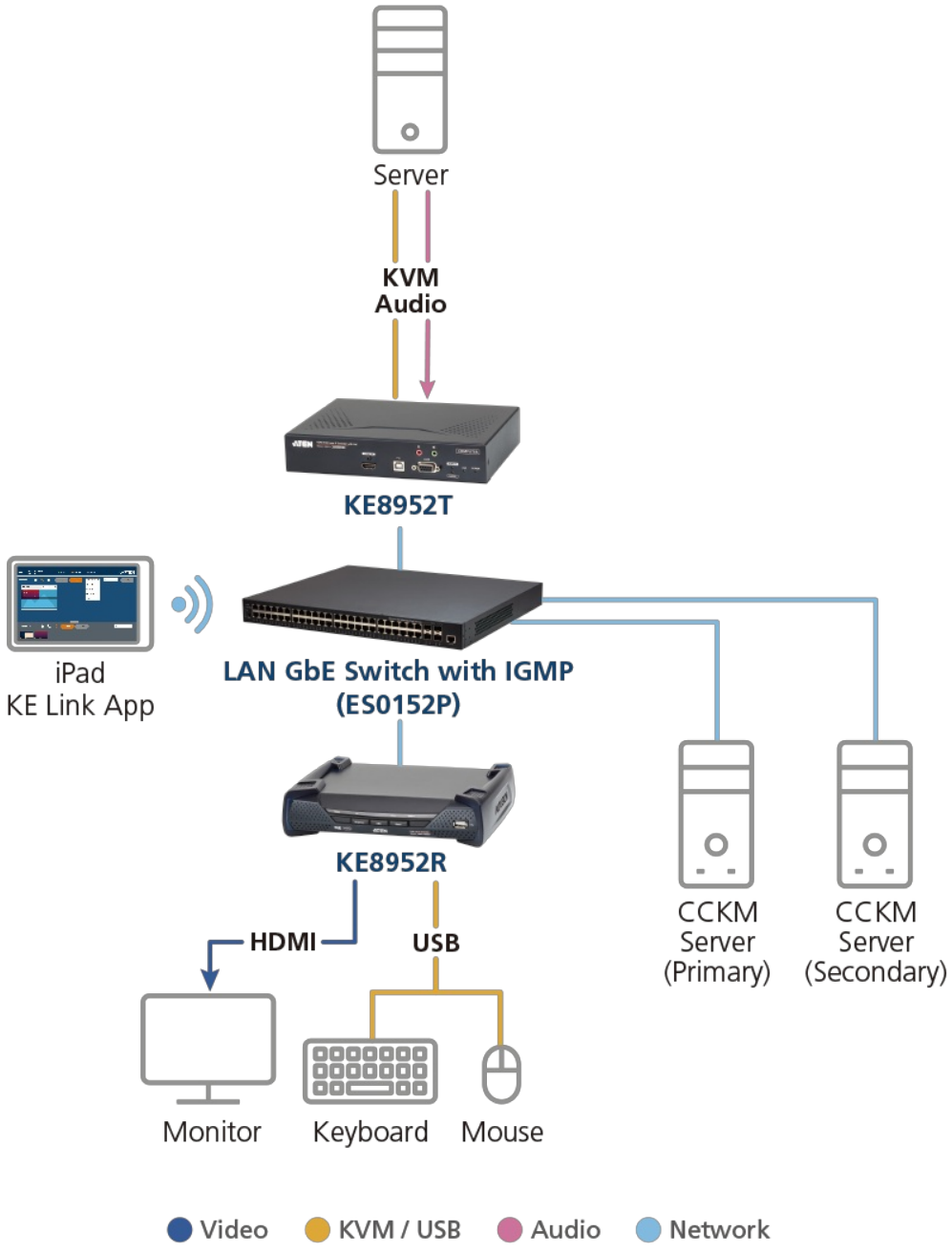
Server
KVM
Audio
KE8952T
iPad
KE Link App
LAN GbE Switch with IGMP
(ES0152P)
KE8952R
HDMI
USB
CCKM
Server
(Primary)
CCKM
Server
(Secondary)
Monitor
Keyboard
Mouse
Video
KVM / USB
Audio
Network